Anets GoldenFry™ 18″ Fryer

Model 18E

Item No.

Ideal For Batch Cooking Large Volumes Of Chicken, Fish, And French Fries

These heavy duty 18″ gas fryers are designed to provide fast recovery. Exclusive tube design minimizes cleanup time while maximizing heat transfer. The elliptical shape of the tubes eliminates sedimentation on tubes, improves shortening life and minimizes the number of times you have to drain fryer. The stainless steel tubes accommodate 150,000 BTUH burners with heat baffles for the best performance and recovery.

STANDARD FEATURES

- Stainless steel frypot has a **lifetime warranty**
- Stainless steel front panel, trim and door
- Tube type design assures maximum heat transfer in the 18″ wide frypot
- Unique shape of tubes allows access to cold zone for easy cleaning
- Burner tubes are equipped with special heat baffles for fast recovery and energy efficiency
- Recessed Lexan faced control panel protects controls from damage
- Stainless steel basket hangers lift off for easy cleaning and access to the backsplash
- Dual shortening levels (70 to 100 lbs) for varying cooking capacities

Model 18E shown on optional casters

ANETS GoldenFRY™

Anetsberger Brothers, Inc. ▪ *Foodservice Equipment That Turns Food Into Gold*
180 North Anets Drive ▪ Northbrook, Illinois 60062
1-800-837-2638 ▪ Fax 847-272-1943 ▪ www.anetsberger.com

Anets GoldenFry™ 18″ Fryer

Model 18E

ANETS GoldenFRY™

SPECIFICATIONS

Model	18E, 18″ Gas fryer
Certification	UL, NSF
BTUH	150,000
Gas Pressure	NG 3.5″ WC, LP 10″ WC
Gas Connection	3/4″ NPT
Electrical Requirements	18E, 120V, 2 Amps
Thermostat	Electric snap action type
Temperature Range	200 to 375F, (93-191C)
Burners	Atmospheric pre-mix
Hi-limit	Safety control turns off main gas supply at 440F (227C)
Safety Pilot	100% gas shut off valve
Spark Ignitor	Piezo electric
Frypot	Stainless steel
Tubes	Stainless steel
Cabinet	Front panel, door, trim and backsplash are Stainless Steel. Sides are painted
Shortening Capacity	70 - 100 lbs
Cooking Capacity	75 lbs. of chicken per hour 110 lbs. of fries per hour
Frying Area	18 x 18 (46 x 46cm)

STANDARD ACCESSORIES

- 2 twin nickel plated baskets
- Rack type basket support
- Clean out rod
- 6″ Adjustable chrome plated legs
- Drain pipe extension
- Piezo ignitor

OPTIONS AND ACCESSORIES

- Fri-Tronic™ multi-product computers with shortening melter, boil out mode and digital timers
- Filter systems, built-in Filtronic or Filter Mate under fryer filter (under 2 fryers)
- Automatic twin basket lifts (18AA)
- Stainless steel sides
- Shortening melter
- Multiple units can be banked at no additional charge
- Single or triple baskets
- Drain table
- Fryer cover
- Front drain tray
- Casters
- Electronic Ignition (Model 18E-EI)

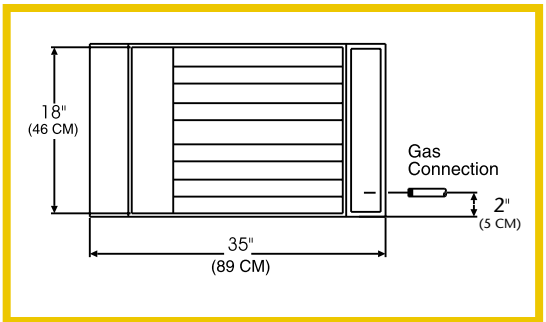

Top View

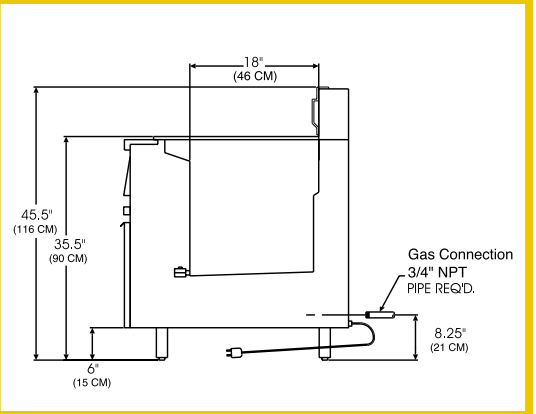

Side View

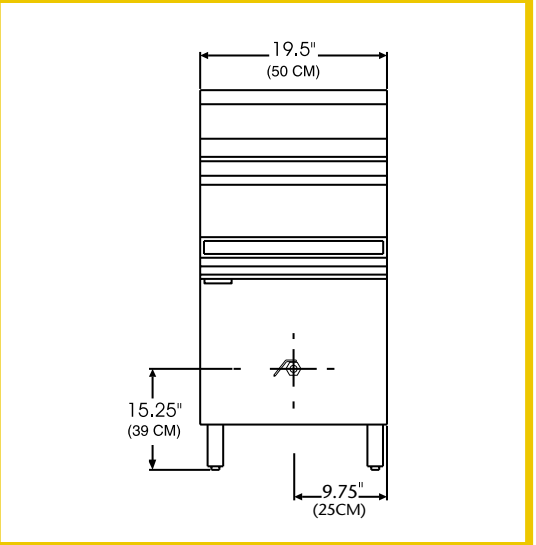

Front View

Specifications subject to change without notice.
SS# 120 Revised 8/02
Printed in the U.S.A.

ANETS

Anetsberger Brothers, Inc. ▪ *Foodservice Equipment That Turns Food Into Gold*
180 North Anets Drive ▪ Northbrook, Illinois 60062
1-800-837-2638 ▪ Fax 847-272-1943 ▪ www.anetsberger.com